GV-BX2700-FD Starlight 2MP H.265 Super Low Lux WDR Pro Face Detection Box IP Camera

IoT Cyber Security

- 1/2.8'' progressive scan super low lux CMOS
- Min. illumination at 0.004 lux
- Tripe streams from H.265, H.264 and MJPEG
- Up to 30 fps at 1920 x 1080
- Megapixel varifocal lens
- P-Iris for auto iris adjustment
- Day and Night function (with removable IR-cut filter)
- Wide Dynamic Range Pro (WDR Pro)
- DC 12V / PoE (IEEE 802.3af)
- Two-way audio
- Built-in / external microphone
- Built-in micro SD card slot (SD/SDHC/SDXC/UHS-I) for local storage
- One sensor input and alarm output
- TV-out support
- Mini USB slot for WiFi adapter or USB hard drive
- Face Detection
- 3D noise reduction
- Smart streaming
- Defog
- Privacy mask
- IP address filtering
- Recording assigned by GV-Edge Recording Manager (Windows, Mac version)
- Supports iPhone, iPad, Android & 3GPP
- 31 languages on Web interface
- ONVIF (Profile S, T) conformant
- TAICS IoT Cyber Security certified

* No Memory card slot & local storage function for Argentina.
* Smart streaming requires GV-DVR / NVR V8.7.0, GV-VMS V16.10.3 or later software versions.
* Face detection requires GV-VMS 18.1 or later.

Introduction

GV-BX2700-FD is specifically designed for face detection. The camera can support H.265 video codec to achieve better compression ratio while maintaining high picture quality at reduced network bandwidths. It is equipped with a Super Low Lux CMOS image sensor which allows the camera to provide a color live view in near darkness. It features a mini USB port which supports wireless connection through a GV-WiFi Adapter (optional) or external storage using a USB hard drive.

Active Tampering Alarm

Tampered

Focus Change

Camera Shift

Dimensions

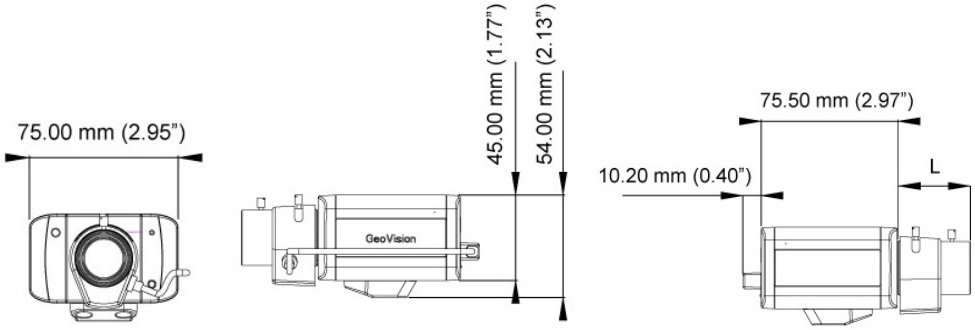

Specifications

Camera		
Image Sensor		1/2.8" progressive scan super low lux CMOS
Picture Elements		1920 (H) x 1080 (V)
Minimum Illumination	Color	0.005 Lux
	B/W	0.004 Lux
	IR ON	0 Lux
Shutter Speed		Automatic, Manual (1/30 ~ 1/16,000 sec)
White Balance		Automatic, Manual (2800 ~ 8500K)
Gain Control		Automatic
S/N Ratio		56 dB
WDR Pro		Yes
Dynamic Range		130 dB
Lens		
Megapixel		Yes
Day/Night		Yes (with removable IR-cut filter)
Lens Type		Varifocal
Focal Length		3 ~ 10.5 mm
Maximum Aperture		F/1.4
Mount		CS Mount
Image Format		1/2.7"
Horizontal FOV		100° ~ 35°
Operation	Focus	Manual (w/lock)
	Zoom	Manual (w/lock)
	Iris	P-Iris
Operation		
Video Compression		H.265, H.264, MJPEG
Video Streaming		Stream 1 from H.265 or H.264 Stream 2 from H.265, H.264 or MJPEG Stream 3 from H.265, H.264 or MJPEG
Frame Rate		50 Hz: 25 fps at 1920 x 1080 60 Hz: 30 fps at 1920 x 1080 * The frame rate and performance may vary depending on the number of connections and data bitrates (different scenes).
Image Setting		Brightness, Contrast, Saturation, Sharpness, Gamma, White Balance, Flicker-less, Image Orientation, Shutter Speed, Backlight Compensation, D/N Sensitivity, WDR, Defog, Low Lux Enhancement, Denoise, Metering
Audio Compression		G.711, AAC (Optional)
Audio Support		Two-way Audio (external speaker required)
Sensor Input		1 input (dry contact)
Alarm Output		1 digital output (200 mA 5V DC)
Face Detection		
Environment		600 lux
Detectable face angle	Tilt (Up/Down)	± 30°
	Swing (Left/Right)	± 60°
Max. number of faces		Up to 16

Min. face image pixel requirement		100 x 100
Video Resolution		
Main Stream	4:3	1280 x 960, 640 x 480
	16:9	1920 x 1080 (Default), 1280 x 720, 640 x 360
	5:4	1280 x 1024, 640 x 512
Sub Stream	4:3	1024 x 768, 640 x 480, 320 x 240
	16:9	1280 x 720, 640 x 360 (Default), 448 x 256
	5:4	1280 x 1024, 640 x 512, 320 x 256
Third Stream (Closed by Default)	4:3	640 x 480, 320 x 240
	16:9	640 x 360 (Default), 448 x 256
	5:4	640 x 512, 320 x 256
Network		
Interface		10/100 Ethernet
Protocol		DHCP, DNS, DynDNS, FTP, HTTP, HTTPS, ICMP, IPv4, IPv6, Multicast, NTP, ONVIF (Profile S, T), QoS(DSCP), RTCP, RTSP, SNMP, SMTP, SSL, TCP/IP, UDP, UPnP, 3GPP/ISMA
Wireless LAN		IEEE 802.11 b/g/n
Antenna Type		External
Security		WEP, WPA-PSK(TKIP), WPA-PSK(AES), WPA2-PSK(TKIP), WPA2-PSK(AES)
Security Feature		- No default ID and Password - 802.1x authentication - HTTPS with a SSL certificate stored in the camera - 256-bit AES encryption (requires firmware V1.14 or later working with GV-VMS V18.1 or later)
Mechanical		
Temperature Detector		Yes
Connectors	Power	2-pin terminal block (DC 12V, 1.25A), PoE
	Ethernet	Ethernet (10/100 Base-T), RJ-45 cable
	Audio	1 In (built-in or external microphone) 1 Out (stereo phone jack, 3.5 mm / 0.14'')
	Digital I/O	3-pin terminal block, pitch 2.5 mm (0.1'')
	Auto Iris	Yes (with varifocal lens)
	Local Storage	Micro SD card slot (SD/SDHC/SDXC/UHS-I, Class 10) *UHS-II card type is not supported.
	TV-Out	BNC connector
	Mini USB	GV-WiFi Adapter or USB hard drive
LED Indicator		2 LEDs: Power, Status
General		
Environment Temperature	Start-up	0 °C ~ 50 °C (32 °F ~ 122 °F)
	Operation	
Humidity		10% to 90% (no condensation)
Power Source		12V DC / PoE (IEEE 802.3af)
Max. Power Consumption		12V DC: 4.2 W PoE: 4.9 W
Dimensions (without lens)		75.5 x 75 x 54 mm (2.97'' x 2.95'' x 2.13'')
Weight		350 g (0.77 lb)
Regulatory		CE, FCC, RCM, LVD, RoHS, TAICS (IoT Cyber Security) compliant
Power over Ethernet		
PoE Standard		PoE (IEEE 802.3af Power over Ethernet / PD)
PoE Power Supply Type		End-Span and Mid-Span
PoE Power Output		Per Port 48V DC, 350 mA, Max. 15.4 watts
Web Interface		
Installation Management		Web-based configuration
Maintenance		Firmware upgrade through Web Browser or Utility
Access from Web Browser		Camera Live View, Video Recording, Change Video Quality, Bandwidth Control, Image Snapshot, Audio, Picture in Picture, Picture and Picture, Privacy Mask, Text Overlay, Digital PTZ
Language		Arabic / Bulgarian / Czech / Danish / Dutch / English / Finnish / French / German / Greek / Hebrew / Hungarian / Indonesian / Italian /Japanese / Lithuanian / Norwegian / Persian / Polish / Portuguese / Romanian / Russian / Serbian / Simplified Chinese / Slovakian / Slovenian / Spanish / Swedish / Thai / Traditional Chinese / Turkish

Applications	
Software Supported	GV-DVR / NVR (V8.7.6 + Patch V8.7.6.2), GV-VMS (V17.1.0.100 + Patch V17.1.0.17), GV-Edge Recording Manager Win Version (V1.4.0.0), GV-Control Center (V3.5.1), GV-Recording Server (V1.4.2), GV-Redundant / Failover Server (V1.1.0.0 + Patch V1.1.0.006)
Smart Device Access	GV-Eye for iOS and Android
Live Viewing	Browser (IE, Chrome, Firefox, Safari), Mobile app

Note:

1. It is required to apply patch files to some of the supported software.
2. The signal range and data throughput may vary depending on the network conditions and environmental factors.
3. Mind the following limitations and requirements for the mini USB port:
   - The USB hard drive must be of 2.5'' or 3.5'', version 2.0 or above
   - The USB hard drive's storage capacity must not exceed 2TB
   - USB flash drives and USB hubs are not supported
   - External power supply is required for the USB hard drive
   - To connect a GV-WiFi Adapter, make sure it is connected before the camera is powered on.
4. Mind the following when using a memory card for recording:
   - Recorded data on the memory card can be damaged or lost if the data are accessed while the camera is under physical shock, power interruption, memory card detachment or when the memory card reaches the end of its lifespan. No guarantee is provided for such causes.
   - The stored data can be lost if the memory card is not accessed for a long period of time. Back up your data periodically if you seldom access the memory card.
   - Memory cards are expendable and their durability varies according to the conditions of the installed site and how they are used. Back up your data regularly and replace the memory card annually.
   - To avoid power outage, it is highly suggested to apply a battery backup (UPS).
   - For better performance, it is highly suggested to use Micro SD card of MLC NAND flash, Class 10.
   - Replace the memory card when its read/write speed is lower than 6 MB/s or when the memory card is frequently undetected by the camera.
5. Specifications are subject to change without notice.

Packing List

1. H.265 Box Camera
2. Terminal Block (2-Pin and 3-Pin)
3. Six Lens Rings
4. Video Out Wire
5. Camera Holder
6. Holder Screw x 2
7. Download Guide
8. Warranty Card

Accessories

Model No.	Name	Details
GV-Housing102 (not supported by GV-BX2700-8F) IP67 IK10	Housing Box (with heater and fan) 	Dimensions: 406 x 145 x 109 mm (16 x 5.7 x 4.3") Weight: 4.69 kg (10.34 lb) (including Supporting Tube) Start-up Temperature: -30°C ~ 50°C (-22°F ~ 122°F) Operation Temperature: -40°C ~ 50°C (-40°F ~ 122°F) Heater: 15°C (59°F) On / 25°C (77°F) Off Fan: 35°C (95°F) On / 25°C (77°F) Off Power board: 24V AC or 12V DC input
GV-Housing103 (not supported by GV-BX2700-8F) IP67 IK10	Housing Box (with IR) 	Dimensions: 404 x 128 x 257 mm (15.91 x 5.04 x 10.12") Weight: 7 kg (15.43 lb) (including Supporting Tube) Start-up Temperature: -20°C ~ 50°C (-4°F ~ 122°F) Operation Temperature: -30°C ~ 50°C (-22°F ~ 122°F) IR: 6 IR LEDs with up to 60 m (196.85ft) IR effective distance Power: 12V DC, 1A input

Model No.	Name	Details
GV-Mount300-1	Convex Corner Adapter Kit 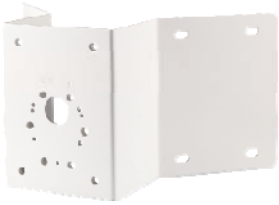	Dimensions: 238.6 x 395.2 x 210 mm (9.4'' x 15.5" x 8.2") Weight: 4.27 kg (9.41 lb)
GV-Mount310-1	Concave Corner Adapter Kit 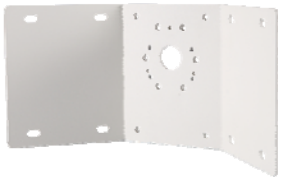	Dimensions: 111.2 x 369.9 x 210 mm (4.37'' x 14.5" x 8.2") Weight: 2.96 kg (6.53 lb)
GV-Mount400-1	Pole Mount Bracket Kit (Ø 4" ~ 6")	Bracket: 68.4 x 240 x 163 mm (2.69" x 9.44'' x 6.41") Weight: 1.70 kg (3.75 lb) Steel Strap Diameter: Ø 4" ~ 6"
GV-Mount410-1	Pole Mount Bracket Kit (Ø 6" ~ 7.5")	Bracket: 68.4 x 240 x 163 mm (2.69" x 9.44'' x 6.41") Weight: 1.70 kg (3.75 lb) Steel Strap Diameter: Ø 6" ~ 7.5"
Supporting Rack		Dimensions: Ø 58 x 120 mm (2.28" x 4.72") Weight: 0.1 kg (103 g)
GV-PA191 PoE Adapter		Weight: 130 g / 0.29 lb Dimensions (H x W x D): 43 x 69 x 40 mm / 1.69" x 2.72" x 1.57"
GV-POE Switch		GV-POE Switch is designed to provide power along with network connection for IP devices. The GV-POE Switch is available in various models with different numbers and types of ports.
GV-Relay V2		GV-Relay V2 is designed to expand the voltage load of GV IP devices. It provides 4 relay outputs, and each can be set as normally open (NO) or normally closed (NC) independently as per your requirement.

Model No.	Name	Details
GV-WiFi Adaptor V2		Weight: 0.01 kg (0.02 lb) Dimensions: 15 x 15 x 155 mm (0.59 x 0.59 x 6.10”) Supplied with Mini USB to standard USB adapter
Power Adapter		Contact our sales representatives for the countries and areas supported.

Note: GV-Housing103 only works with GV-Mount300-1, GV-Mount310-1, GV-Mount400-1, GV-Mount410-1.