GV-TDR4700 4MP H.265 Low Lux WDR Pro IR Mini Fixed Rugged IP Dome

- 1/3" progressive scan low lux CMOS sensor
- Triple streams from H.265, H.264 or MJPEG
- Up to 20 fps at 2592 x 1520, 25 fps at 2560 x 1440, 30 fps at 2048 x 1520
- Intelligent IR
- IR distance up to 30 m (100 ft)
- Day and night function (with removable IR-cut filter)
- 3-axis mechanism (pan / tilt / rotate)
- Ingress protection (IP67)
- Vandal Resistance (IK10 for metal casing)
- Built-in micro SD card slot (SD / SDHC / SDXC / UHS-I, Class 10) for local storage
- Two-way audio
- 1 sensor input and 1 alarm output
- DC 12V / PoE (IEEE 802.3af)
- Wide Dynamic Range Pro (WDR Pro)
- Defog
- 3D noise reduction
- Motion detection
- Text overlay
- Privacy mask
- ONVIF (Profile G, S, T) conformant

Introduction

The Mini Fixed Rugged IP Dome is an outdoor, fixed, network camera equipped with an automatic IR-cut filter and an IR LED for day and night surveillance. The camera supports H.265 video codec to achieve better compression ratio while maintaining high quality pictures at reduced network bandwidths. The camera adheres to IP67 and IK10 standards, and can be powered through PoE.

Models

Model	Iris	Focal Length (mm)	Horizontal FOV	Maximum Aperture	Image Format
GV-TDR4700-0F	Fixed	2.8 mm	100°	F/2.0	1/3”
GV-TDR4700-1F		3.6 mm	78°		

Dimensions

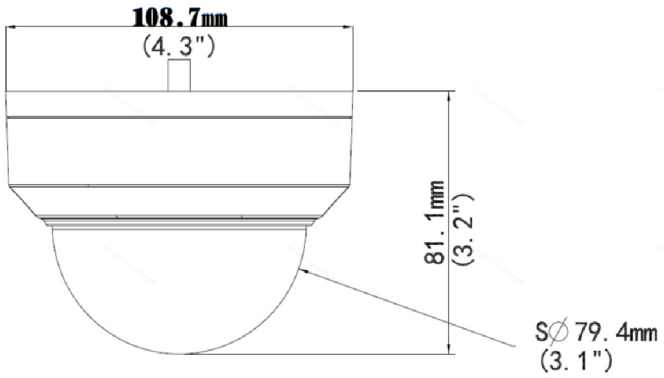

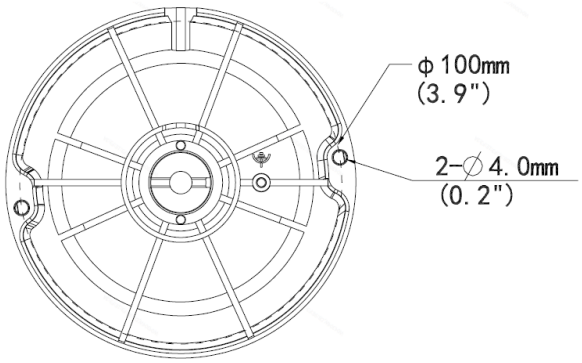

Specifications

Camera			
Image Sensor		1/3" progressive scan low lux CMOS	
Picture Elements		2592 (H) x 1520 (V)	
Minimum Illumination	Color	0.03 Lux (F2.0, AGC ON)	
	IR ON	0 Lux	
Shutter Speed		Auto / Manual (1 ~ 1/100000 sec)	
White Balance		Auto / Manual	
Gain Control		Auto / Manual	
S/N Ratio		55 dB	
WDR Pro		Yes	
Dynamic Range		120 dB	
Lens		**GV-TDR4700-0F**	**GV-TDR4700-1F**
Megapixel		Yes	
Day / Night		Yes (with removable IR-cut filter)	
Lens Type		Fixed	
Focal Length		2.8 mm	3.6 mm
Maximum Aperture		F/2.0	
Mount		M12	
Horizontal FOV		100°	78°
Operation	Focus	Fixed	
	Zoom	Fixed	
	Iris	Fixed	
IR LED Quantity		1 IR LED	
Max. IR Distance		30 m (100 ft)	
Operation			
Video Compression		H.265, H.264, MJPEG	
Video Streaming		Triple streams from H.265, H.264 or MJPEG	
Video Resolution	Main Stream	2592 x 1520, 2560 x 1440, (Default), 2048 x 1520, 1920 x 1080	
	Sub Stream	1920 x 1080, 1280 x 720, 720 x 576, 704 x 288, 640 x 360 (Default), 352 x 288	
	Third Stream (Closed by Default)	720 x 576, 704 x 288, 640 x 360, 352 x 288	
Frame Rate		20 fps at 2592 x 1520, 25 fps at 2560 x 1440, 30 fps at 2048 x 1520 (60 / 50 Hz) * The frame rate and performance may vary depending on the number of connections and data bitrates (different scenes).	
Video Analytics		Motion Detection, Tampering Alarm, Audio Detection, Cross Line, Intrusion, Object Moving, Object Left, Defocus, Scene Change, Face Detection, People Counting *Tampering alarm, audio detection, cross line, intrusion, object moving, object left, defocus, scene change, face detection and people counting are only accessible through the camera's Web interface, which can be used to trigger alerts such as e-mail and FTP	
Image Setting		Brightness, Contrast, Saturation, Sharpness, Flicker-less, Image Orientation	
Audio Compression		G.711, AAC (optional)	
Audio Support		Two-way Audio (external microphone and speaker required)	
Digital I/O	Input	1 Input, dry contact, NO / NC	
	Output	1 Relay Output (1A 30V DC / 0.3A 125V AC)	
Network			
Interface		10/100 Ethernet	
Protocol		802.1x, ARP, DHCP, DDNS, DNS, DynDNS, FTP, HTTP, HTTPS, ICMP, IGMP, IPv4, NTP, PPPoE, QoS, RTCP, RTP, RTSP, SMTP, SNMP, TCP, UDP, UPnP, ONVIF (Profile G, S, T)	
Mechanical			
Temperature Detector		No	
Camera Angle Adjustment	Pan	0° ~ 360°	
	Tilt	0° ~ 75°	
	Rotate	0° ~ 360°	

Connectors	Power	DC Jack (DC 12 V, 1.25 A), PoE
	Ethernet	RJ-45 connector
	Audio	2 in (Audio In Wire); 1 out (Audio Out Wire) *The Audio In port only support microphones with power supply.
	Digital I/O	I/O wires
	Local Storage	Micro SD card slot (SD / SDHC / SDXC / UHS-I, Class 10) *UHS-II card type is not supported.
General		
Operating Temperature		-35°C ~ 60°C (-31°F ~ 140°F)
Humidity		0% ~ 95% (no condensation)
Power Source		12 V DC / PoE (IEEE802.3af)
Max. Power Consumption		5 W
Dimensions		Ø 108.7 x 81.1 mm (Ø4.3” x 3.2”)
Weight		0.45 kg (0.99 lb)
Ingress Protection		IP67
Vandal Resistant		IK10 for metal casing
Regulatory		FCC, CE, RoHS compliant
Web Interface		
Installation Management		Web-based configuration
Maintenance		Firmware upgrade through Web Browser or GV-IP Device Utility (V8.7.2.1)
Access from Web Browser		Live View, Video Recording, Change Video Quality, Bandwidth Control, Image Snapshot, Defog, Text Overlay, Image Masking
Language		Czech, English, French, German, Hungarian, Italian, Japanese, Polish, Portuguese, Russian, Spanish, Traditional Chinese
Applications		
Software Supported		GV-DVR / NVR (V8.8.0), GV-VMS (V17.1.0.100), GV-Control Center (V3.5.1), GV-Edge Recording Manager Win Version (V1.4.0), GV-Recording Server / Video Gateway (V1.4.2), GV-Redundant / Failover Server (V1.1.0.0)
Smart Device Access		GV-Eye for iOS and Android
Live Viewing		Browser (IE, Edge, Chrome, Firefox, Safari), Mobile App

Note:

1. It is required to apply patch files to some of the supported software.
2. Do not use clothes or any ordinary material to clean the camera cover since they may result in scratches.
3. Specifications are subject to change without notice.

Packing List

1. GV-TDR4700 IR Mini Fixed Rugged IP Dome
2. Waterproof Rubber Set
3. Screw Kit
4. Drill Template Paster
5. Download Guide
6. Warranty Card

Accessories

Model No.	Name		Details
GV-Mount107 (must be used with GV-Mount213)	Pendant Bracket		Dimensions: Ø 120 x 334 mm (Ø 4.72” x 13.15”) Weight: 0.74 kg (1.63 lb)
GV-Mount211P	Wall Mount Bracket		Dimensions: Ø 233 x 126 x 126 mm (Ø 9.2” x 5” x 5”) Weight: 1 kg (2.2 lb)
GV-Mount213	Wall / Ceiling Box Mount		Dimensions: Ø 109 x 39 mm (Ø 4.3” x 1.5”) Weight: 0.2 kg (0.44 lb)

Model No.	Name		Details
GV-Mount300-2	Convex Corner Mount		Dimensions: 137 x 233 x 160 mm (5.4” x 9.17” x 6.3”) Weight: 1.65 kg (3.64 lb)
GV-Mount310-2	Concave Corner Mount		Dimensions: 111.2 x 369.9 x 210 mm (2.6” x 11.4” x 6.6”) Weight: 1.65 kg (3.64 lb)
GV-Mount420 (must be used with GV-Mount211P)	Pole Mount Bracket		Dimensions: Ø 120 x 120 x 53.4 mm (Ø 4.7” x 4.7” x 2.1”) Weight: 0.45 kg (0.99 lb) Steel Strap Diameter: Ø 67 ~ 127 mm (Ø 2.6” ~ 5”)
GV-Mount704 (must be used with GV-Mount107)	Extension Tube		Dimensions: Ø 3.5 x 10 or 20 or 30 or 50 cm (Ø 1.38 x 3.9 or 7.9 or 11.8 or 19.7”) Weight: 225g or 360g or 500g or 780g (0.5 lb or 0.79 lb or 1.1 lb or 1.72 lb)
GV-PA191	Power over Ethernet (PoE) Adapter		The GV-PA191 is a Power over Ethernet (PoE) adapter designed to provide power to the IP device through a single Ethernet cable.
GV-POE Switch		The GV-POE Switch is designed to provide power along with network connection for IP devices. The GV-POE Switch is available in various models with different numbers and types of ports.	
Power Adapter		Contact our sales representatives for the countries and areas supported.	